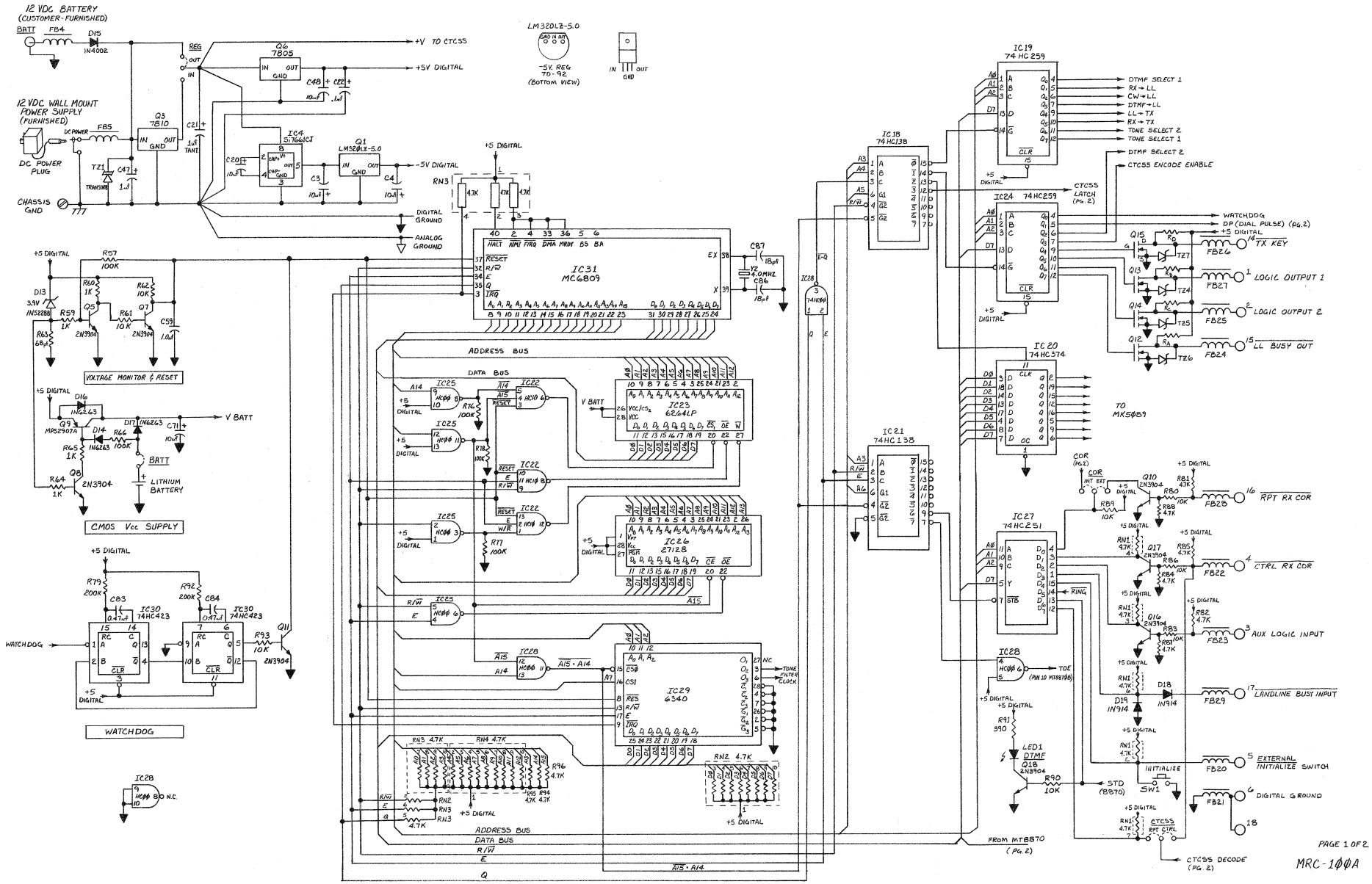
12 VDC BATTERY
(CUSTOMER-FURNISHED)
12 VDC WALL MOUNT POWER SUPPLY (FURNISHED)
DC POWER PLUG
CHASSIS GND
+V TO CTCSS
+5V DIGITAL
-5V DIGITAL
DIGITAL GROUND
ANALOG GROUND
LM320LZ-5.0
-5V REG TO-92 (BOTTOM VIEW)
IC31 MC6809
IC23 6264LP
IC26 27128
IC29 6340
IC19 74HC259
IC18 74HC138
IC24 74HC259
IC20 74HC374
IC21 74HC138
IC27 74HC251
TO MK50B9
DTMF SELECT 1
RX→LL
CW→LL
DTMF→LL
LL→TX
RX→TX
TONE SELECT 2
TONE SELECT 1
DTMF SELECT 2
CTCSS ENCODE ENABLE
CTCSS LATCH (PG. 2)
WATCHDOG
DP (DIAL PULSE) (PG.2)
TX KEY
LOGIC OUTPUT 1
LOGIC OUTPUT 2
LL BUSY OUT
RPT RX COR
CTRL RX COR
AUX LOGIC INPUT
LANDLINE BUST INPUT
EXTERNAL INITIALIZE SWITCH
DIGITAL GROUND
CTCSS DECODE (PG. 2)
FROM MT8870 (PG. 2)
VOLTAGE MONITOR & RESET
CMOS Vcc SUPPLY
WATCHDOG
ADDRESS BUS
DATA BUS
PAGE 1 OF 2
MRC-100A

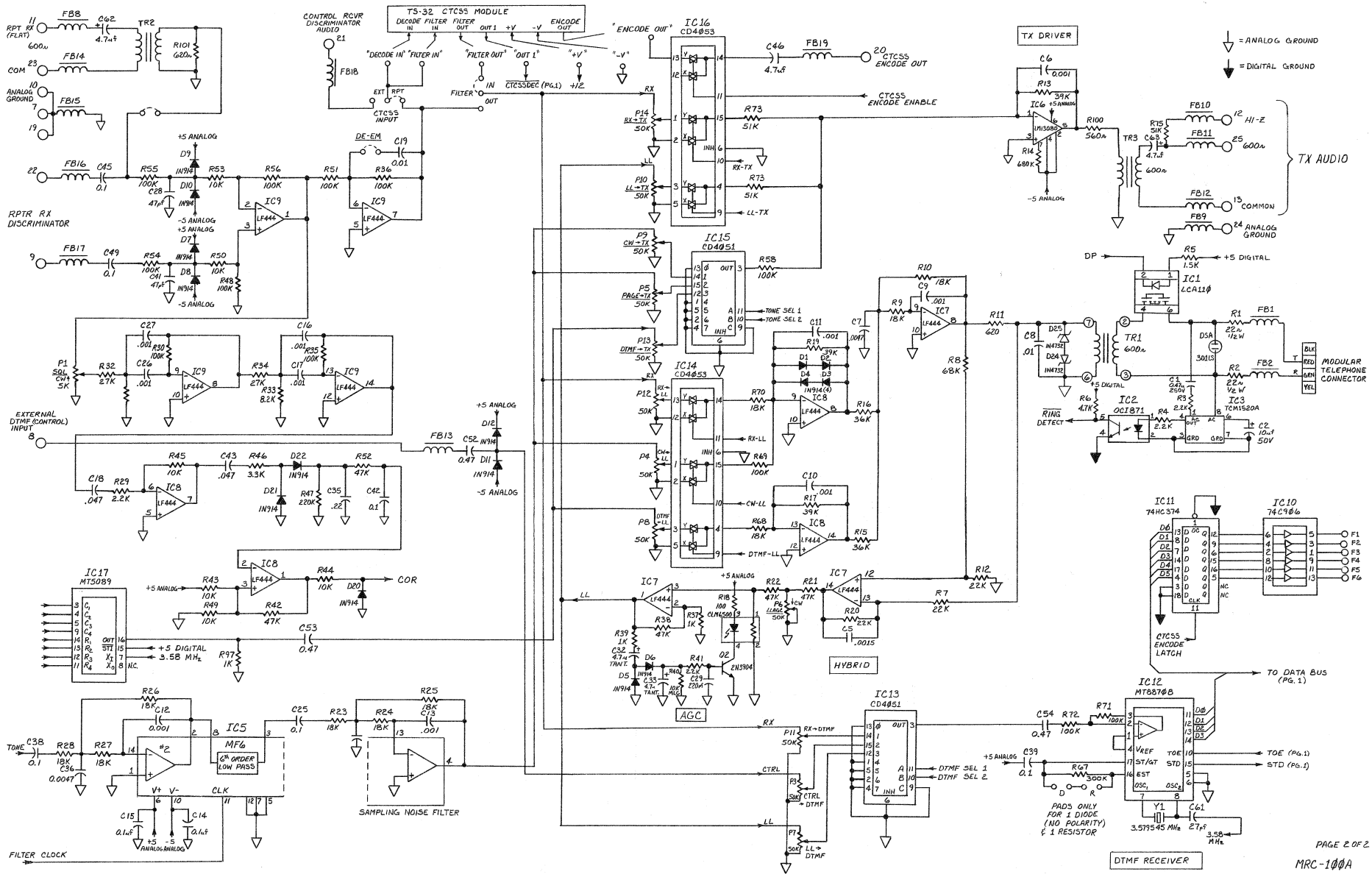
TS-32 CTCSS MODULE
DECODE IN
FILTER IN
FILTER OUT
OUT 1
+V
-V
ENCODE OUT
RPT RX (FLAT)
COM
ANALOG GROUND
RPTR RX DISCRIMINATOR
CONTROL RCVR DISCRIMINATOR AUDIO
CTCSS INPUT
EXTERNAL DTMF (CONTROL) INPUT
IC16 CD4053
IC15 CD4051
IC14 CD4053
IC13 CD4051
CTCSS ENCODE OUT
CTCSS ENCODE ENABLE
TX DRIVER
TX AUDIO
HI-Z
COMMON
ANALOG GROUND
= ANALOG GROUND
= DIGITAL GROUND
MODULAR TELEPHONE CONNECTOR
RING DETECT
IC11 74HC374
IC10 74C906
CTCSS ENCODE LATCH
TO DATA BUS (PG. 1)
IC17 MT5089
COR
IC5 MF6
6th ORDER LOW PASS
SAMPLING NOISE FILTER
FILTER CLOCK
AGC
HYBRID
IC12 MT8870B
DTMF RECEIVER
PADS ONLY FOR 1 DIODE (NO POLARITY) & 1 RESISTOR
TOE (PG. 1)
STD (PG. 1)
PAGE 2 OF 2
MRC-100A